State of Vermont
Agency of Transportation
Materials and Research Division
INDEX
To Vermont Standard Tests

VT-AOT-MRD 1-81 – Vermont Test for Heat Stability of Anti-Strip Additive in Asphalt Cement 96-hour Method

VT-AOT-MRD 2-77 – Vermont Test for Compressive Strength of Quick-Set Cements and Patching Compounds

VT-AOT-MRD 3-86 – Vermont Test for Flexural Strength of Bonded Quick-Set Cements and Patching Compounds Using Simple Beam with Center Point Loading

VT-AOT-MRD 4-77 – Vermont Test for Freeze-Thaw Durability of Quick-Set Cements and Patching Compounds plus Data Sheets

VT-AOT-MRD 5-77 – Vermont Test for Time of Setting of Quick-Set Cements and Patching Compounds by Gillmore Needles

VT-AOT-MRD 6-77 – Vermont Test for Acid Insoluble Residue

VT-AOT-MRD 7-85 – Vermont Test for Resistance of Concrete and Concrete Treatments to Chloride Ion Penetration

VT-AOT-MRD 8-77 – Vermont Test for Cold Temperature Flexibility of Waterproofing Membranes

VT-AOT-MRD 9-82 – Vermont Test for Evaluating a New Source of Structural Concrete Aggregate

VT-AOT-MRD 10-81 – Vermont Test for Effectiveness of Anti-Strip Additive in Asphalt Cement Boiling Method

VT-AOT-MRD 11-77 – Vermont Test for Crack Bridging Qualities of Waterproofing Membranes at Cold Temperatures

VT-AOT-MRD 12-84 – Vermont Test for Moisture Absorption of Concrete Specimens

VT-AOT-MRD 13-77 – Vermont Test for Quantitative Extracting of Bitumen from Bituminous Paving Mixtures

VT-AOT-MRD 14-77 – Vermont Test for Mechanical Analysis of Extracted Aggregate

VT-AOT-MRD 15-77 – Vermont Test for Sieve Analysis of Coarse and Fine Aggregates

VT-AOT-MRD 16-77 – Vermont Test for Determination of Resistance to Puncture of Waterproofing Membranes

VT-AOT-MRD 17-77 – Vermont Test for Determining Resistance of Waterproofing Membranes to Bubbling or Pinholing Due to Vapor Pressure

VT-AOT-MRD 18-77 – Vermont Test for Determination of Permeability of Bridge Deck Membranes

VT-AOT-MRD 19-77 – Vermont Test for Adhesion of Bridge Deck Waterproofing Membranes

VT-AOT-MRD 20-84 – Vermont Test for Chloride Content of Concrete

VT-AOT-MRD 21-79 – Vermont Test for Sampling Preliminary Materials to Be Used in the Design of Stabilized Base Course or Cold Mix

VT-AOT-MRD 22-79 – Vermont Test for Determination of Thin and/or Elongated Particles in Coarse Aggregate

VT-AOT-MRD 23-79 – Vermont Test for Determination of Coarse Aggregate Particles with Fractured Faces

VT-AOT-MRD 24-79 – Vermont Test for Preparing Preliminary Samples to be Used in The Design of Stabilized Base Course or Cold Mix

VT-AOT-MRD 25-78 – Vermont Test for Freeze-Thaw Durability of Structural Concrete Mixes

VT-AOT MRD 26-78 – Replaced by MRD 3-86

VT-AOT MRD 27-79 – Vermont Test for Determining the Correct Asphalt and Moisture Contents to be used in a Stabilized Base Course of Cold Mix

VT-AOT MRD 28-79 – Vermont Test for Air Content of Freshly Mixed Concrete by the Chace Air Indicator

VT-AOT MRD 29-84 – Vermont Test for Compressive Strength of Cylindrical Concrete Specimens using Neoprene Caps

VT-AOT MRD 30-78 – Vermont Test for Thermal Compatibility Between Concrete and Epoxy Resins

VT-AOT MRD 31-78 – Vermont Test for Effective Shrinkage of Epoxy Resin Systems Used With Concrete

VT-AOT MRD 32-78 – Vermont Test for Maintenance of Adhesion and Elongation during Freeze-Thaw Cycling of Polyurethane

VT-AOT MRD 33-78 – Vermont Test for Tack Free Time of Polyurethane Joint Sealer

VT-AOT MRD 34-78 – Vermont Test for Weight Loss after Heat-Aging of Polyurethane Joint Sealers

VT-AOT MRD 35-78 – Vermont Test for Obtaining Samples of Pulverized Concrete for Chloride Analyses

VT-AOT MRD 36- – Reserved for MRD 36 – No Record At This Time

VT-AOT MRD 37-85 – Vermont Test for Locating and Measuring Delaminations in Concrete Bridge Decks

VT-AOT MRD 38-86 – Vermont Test for Conducting an Annual Testing Program of Structural Concrete Aggregates

VT-AOT MRD 39-86 – Vermont Test for % Pigment, % Vehicle in Mixed Paints, and % Volatiles and Non Volatiles in Vehicle

VT-AOT MRD 40-86 – Vermont Test for Determination of PCC Pavement Thickness for Final Acceptance and Payment

VT-AOT MRD 41-88 – Vermont Test for Determining Corrosion Activity in Reinforced Concrete

VT-AOT MRD 42-88 – Vermont Test for Determining Corrosion Activity of Membrane Waterproofed Bridge Decks

VT-AOT MRD 43-89 – Vermont Test for Approval of Flexible Delineators

VT-AOT MRD 44 – Obsolete

VT-AOT MRD 45 – Replaced by ASHTO T-209

VT-AOT MRD 46-94 – Vermont Test for Inspecting Durable Pavement Markings

VT-AOT MRD 47-95 – Vermont Test for Determination of Total Chloride Ion Content of Cementitious Material

VT-AOT MRD 48-97 – Vermont Test for Calcium Oxide

VT-AOT MRD 49-97 – Vermont Test for Insoluble Residue

VT-AOT MRD 50-97 – Vermont Test for Loss on Ignition

VT-AOT MRD 51-97 – Vermont Test for Magnesium Oxide

VT-AOT MRD 52-97 – Vermont Test for Silicon Dioxide in Portland Cement

VT-AOT MRD 53-97 – Vermont Test for Sulfur Trioxide

VT-AOT MRD 54-09 – Vermont Test for Target Density Determination for Subbase Compaction Control

VT-AOT MRD 55-06 – Vermont Test for Determination of Subbase Compaction

VT-AOT MRD 56-09 – Vermont Test for Determination of the presence of the Anti-Caking Agent YPS

VT-AOT MRD 57-09 – Vermont Test for Determination of Acid-Insoluble Residue in Aggregate

VT-AOT MRD 58-12 – Vermont Test for Determination of Unixial Compressive Strength of Rock Cores

E. L. C.
Prepared by: E. L. Chaffee

STATE OF VERMONT
AGENCY OF TRANSPORTATION
MATERIALS & RESEARCH DIVISION

VERMONT TEST FOR HEAT STABILITY OF ANTI-STRIP ADDITIVE IN ASPHALT CEMENT 96 HOUR METHOD

VT-AOT-MRD 1-81

1. SCOPE

A 96 hour test for checking heat stability of anti-strip additives. Anti-strip additives will be evaluated at 0.5% by weight of the asphalt cement, unless otherwise specified.

2. APPARATUS

2.1 Scale or balance conforming to requirements of AASHTO Designation: M 231 Class D.

2.2 Oven - the oven shall be capable of maintaining a temperature of 275°F (135°C.)

2.3 Container - one pint, triple friction top, can. (Paint can is sufficient.)

2.4. Metal Spatula - six inch.

3. MATERIALS

3.1 Additive; the anti-strip additive to be tested shall contain no ingredients harmful to the bituminous material and shall not alter appreciably the specified characteristics of the bituminous material. It shall be capable of thorough dispersion in the bituminous material.

3.2 Asphalt Cement; the asphalt cement to be used on a specific project will be used for testing the anti-strip additive selected for the project.

An acceptable AC-10 viscosity graded or 85-100 penetration graded asphalt cement will be used for testing when an anti-strip additive is submitted for a preliminary evaluation.

3.3 Aggregate; the aggregate to be used on a specific project will be used for testing the anti-strip additive selected for the project.

A reference aggregate (Barre Granite) will be used for testing when an anti-strip additive is submitted for a preliminary evaluation.

4. PROCEDURE

4.1 Heat asphalt cement to 275°F (135°C).

4.2 Place 300 grams of asphalt cement into a tared, one pint, triple friction top can, that contains the proper amount of anti-strip additive. Stir the mixture thoroughly with a metal spatula for two minutes.

4.3 Using the proper materials, perform Vermont Test for Effectiveness of Anti-Strip Additive in Asphalt Cement - Boiling Method, VT-AOT-MRD 10-81 to determine if the anti-strip additive is acceptable initially.

4.4 Seal the container with the remaining mixture and place in an oven maintained at 275°F (135°C) for a period of 96 hours.

4.5 At the end of 96 hours, remove the container from the oven and repeat Vermont Test for Effectiveness of Anti-Strip Additive In Asphalt Cement - Boiling Method - VT-AOT-MRD 10-81.

5. REPORT

5.1 Visual examination: The anti-strip additive will be considered heat stable when after the 96 hour test period, the aggregate remains 95% to 100% coated.

STATE OF VERMONT
AGENCY OF TRANSPORTATION

MATERIALS & RESEARCH DIVISION

VERMONT TEST FOR COMPRESSIVE STRENGTH OF QUICK-SET CEMENTS AND PATCHING COMPOUNDS

VT. A.O.T. - MRD 2 -77

1. Scope

To determine the compressive strength of quick-set cements and patching compounds under laboratory conditions at 4 hours, 24 hours, 3 days, and 14 days.

2. Apparatus

As described in AASHTO T 106-72 "Compressive Strength of Hydraulic Cement Mortars" minus weights, sieves, flow table and mold.

3. Procedure

Material will be mixed according to manufacturers recommendations. Test specimens shall be molded and stored as described in AASHTO T 106-72. Three cubes will be removed from moisture cabinet at 4 hours, molds stripped and cubes tested for compressive strength. Remaining cubes will be removed from cabinet at 24 hours, all molds stripped and three cubes tested for compressive strength. Remaining cubes will be placed back in moisture cabinet and three each tested at 3 days and 14 days age.

4. Report

Record compressive strength in p.s.i. at each test and average for each age group. Complete data sheet.

STATE OF VERMONT
AGENCY OF TRANSPORTATION
MATERIALS & RESEARCH DIVISION

Data Sheet For
Compressive Strength of Quick-Set
Cements and Patching Compounds

(VT. A.O.T. MRD 2)

Product Name:

Manufacturer & Distributor:

Date & Quantity Sample Received:

Lot Number:

Date Mixed:

% Water by Weight:

Temp. Mix Water:

Room Temp.:

Workability:

Compressive Strength

Age	4 hours	24 hours	3 days	14 days
#1				
#2				
#3				
Ave.				

Comments:

Revised By: Corti & Benda
Date: November 18, 1986

VERMONT AGENCY OF TRANSPORTATION
MATERIALS & RESEARCH DIVISION
RESEARCH & DEVELOPMENT SUBDIVISION

Method Of Test For Flexural Strength Of Bonded Quick-Set Cements And Patching Compounds Using Simple Beam With Center Point Loading

VT A.O.T. - MRD 3-86

1. Scope

To determine the flexural strength of bonded quick-set cements and patching compounds under laboratory conditions.

2. Apparatus

As described in AASHTO T 126, "Making And Curing Concrete Test Specimens In The Laboratory", and AASHTO T 177, "Flexural Strength Of Concrete, (Using Simple Beam With Center Point Loading).

3. Procedure

The test will be conducted by casting a test beam against a precast concrete beam and testing for flexural strength at an age of 7 days.

The precast concrete beam is made and cured according to AASHTO T 126, "Making And Curing Concrete Test Specimens In The Laboratory". The concrete shall be Class A concrete meeting the requirements of Item 501.22 of the Vermont Standard Specifications For Construction. After a minimum 7 day curing period, the 3" x 3" x 12" precast beam is sawed transversely at midspan to make (2) precast concrete beams. Material to be evaluated will be mixed according to manufacturer's recommendations. Flexural test beams will be made in steel molds 3" x 3" x 12". The sawed end of the precast beam is wire brushed underwater and this end is soaked in water to saturate the surface. Once the end is saturated, it shall be coated with test material, and pressed and worked with the ball of the hand to fill voids in the cut end. This will help insure good bond of the test material to precast beam. The precast beam is then placed in one half of the mold with the prepared end facing the empty half of the mold. The remainder of the mold is then filled with test material according to AASHTO T 126. Curing will be in accordance with the manufacturer's recommendations on the product packaging. If none are given, specimens shall be air cured. At an age of 7 days the beams will be tested for flexural strength by center point loading.

3. Procedure (CONTINUED)

Flexural strength is determined by centering the beam in the testing apparatus as pictured in Figure 1 with the top (finished surface) of the beam facing the front and load applied until failure. Compute the modulus of rupture using the formula.

Calculation:

$$\text{Modulus Of Rupture, p.s.i.} = \frac{3\ (\text{Max. Applied Load, lb})\ (\text{Span Length, in.})}{2\ (\text{Avg. Width of Spec. in.})\ (\text{Avg. Depth, in})^2}$$

$$\text{Modulus Of Rupture, p.s.i.} = \frac{3\ (\text{Max. Applied Load, lb})\ (9)}{2(3)^3}$$

$$\text{Modulus Of Rupture, p.s.i.} = 0.5\ (\text{Max. Applied Load, lb})$$

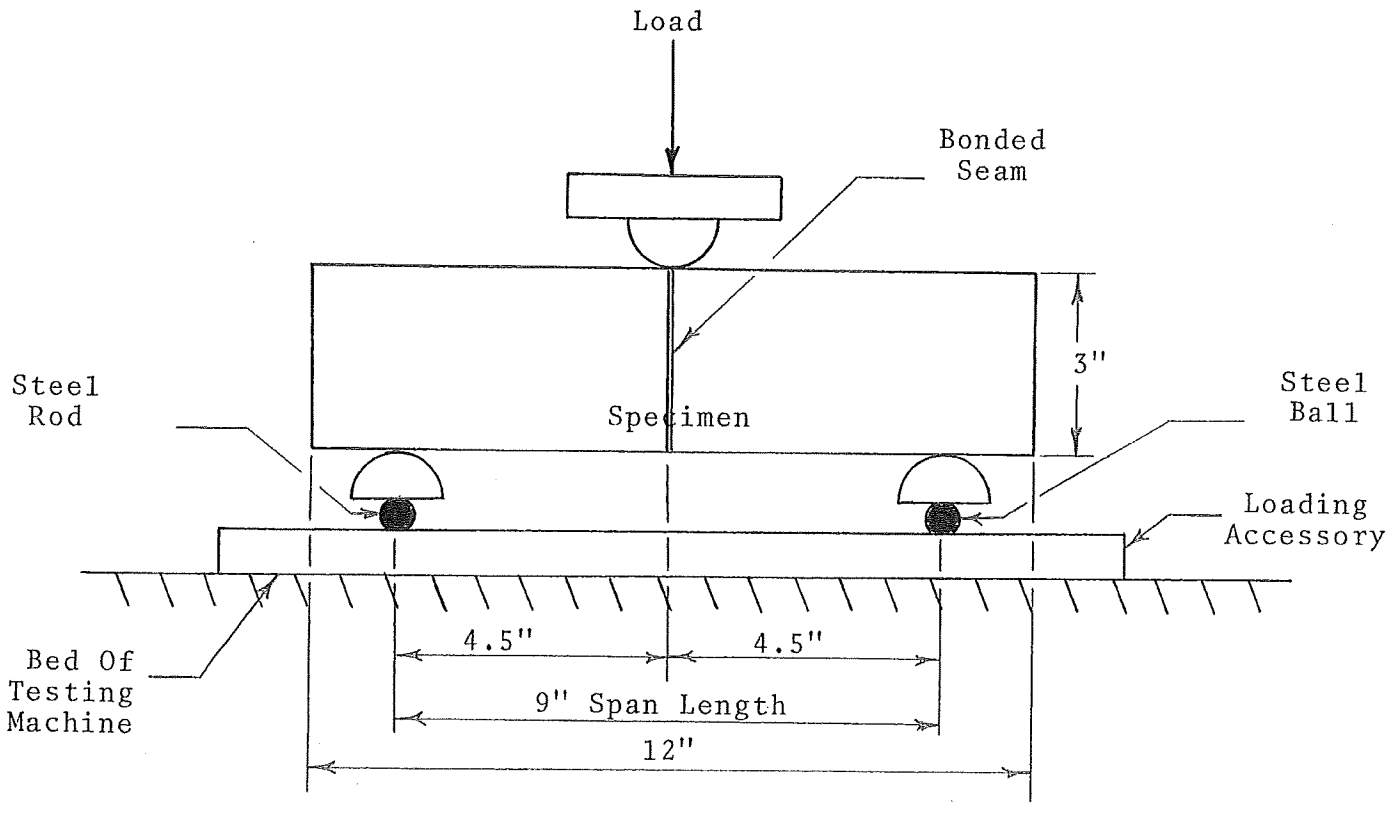

Figure 1

4. Report

Modulus Of Rupture

Comments

VERMONT AGENCY OF TRANSPORTATION
MATERIALS & RESEARCH DIVISION
RESEARCH & DEVELOPMENT SUBDIVISION

Data Sheet For
Flexural Strength Of Bonded Quick-Set
Cements And Patching Compounds

VT A.O.T. - MRD 3-86

Product Name:

Manufacturer & Distributor:

Date & Quantity Sample Received

Lot Number:

Date Mixed:

% Water By Weight:

Temperature Mix Water:

Room Temperature:

Workability:

Modulus Of Rupture

Beam #1

Beam #2

Comments:

Prepared by: W. Hodgdon/RF.
Date: February 22, 1977

STATE OF VERMONT
AGENCY OF TRANSPORTATION
MATERIALS & RESEARCH DIVISION

VERMONT TEST FOR FREEZE-THAW DURABILITY OF QUICK-SET CEMENTS AND PATCHING COMPOUNDS.

VT. A.O.T. - MRD4-77

1. Scope: To determine freeze-thaw durability of quick-set cements and patching compounds in a 3% NaCl solution under laboratory conditions.

2. Apparatus: As described in AASHTO T 106-72 "Compressive Strength of Hydraulic Cement Mortars" minus weights, sieves, flow table and mold.

3. Procedure: Material will be mixed according to manufacturers recommendations. Test specimens shall be molded and stored as described in AASHTO T 106-72. At the end of 24 hours all molds shall be removed and specimens cured in the fog room for 2 additional days. All specimens will be removed from the fog room after the 3 day wet cure and stored in the laboratory at constant 50% humidity. Immediately prior to starting the freeze-thaw cycling, the cubes will be soaked in water a minimum of 2 hours and then weighed in a saturated surface dry condition to determine initial weights. Three each cubes at cured ages of 3 days, 14 days, 28 days and 60 days will be immersed 1" in a 3% NaCl solution and freeze-thaw cycles begun. A record of freeze-thaw cycles will be kept and specimens soaked and weighed surface dry at 25 cycle intervals. The percent weight loss will be computed from original weight of specimens and records kept. Freeze-thaw cycling may be stopped at any time if severe deterioration is noted.

4. Report: Report will consist of percent weight loss at various freeze-thaw cycle intervals as well as comments on visual observations.

Prepared by:
Date:

STATE OF VERMONT
AGENCY OF TRANSPORTATION
MATERIALS & RESEARCH DIVISION
RESEARCH & DEVELOPMENT SUBDIVISION

Data Sheet For
Freeze-Thaw Durability Quick-Set
Cements and Patching Compounds
VT. A.O.T. - MD 4

Product Name:

Manufacturer:

Date & Quantity Sample Received: _____ _____

Lot Number: _____

Date Mixed: _____ % Water by Weight: _____

Room Temp.: _____ Temp. Mix Water: _____

Workability:

Age at Start of Cycling	ID. #	% Weight Loss At 25 Cycles	% Weight Loss At 50 Cycles	% Weight Loss At 75 Cycles	% Weight Loss At 100 Cycles	% Weight Loss At 125 Cycles	% Weight Loss At 175 Cycles	% Weight Loss At 200 Cycles	% Weight Loss At 225 Cycles	% Weight Loss At 250 Cycles	% Weight Loss At 275 Cycles	% Weight Loss At 300 Cycles	% Weight Loss At 325 Cycles

COMMENTS:

Prepared by:
Date:

STATE OF VERMONT
AGENCY OF TRANSPORTATION
MATERIALS & RESEARCH DIVISION

VERMONT TEST FOR
FREEZE THAW DURABILITY OF QUICK SET CEMENTS
AND PATCHING COMPOUNDS
VT. A.O.T. MRD 4

DURABILITY WORKSHEET

PRODUCT NAME:

Age at Start of Cycling	ID. #	Weight at Start of Test	Weight at 25 Cycles	Weight Loss Percent	Weight at 50 Cycles	Weight Loss Percent	Weight at 75 Cycles	Weight Loss Percent	Weight at 100 Cycles	Weight Loss Percent	Weight at 125 Cycles	Weight Loss Percent	Weight at 150 Cycles	Weight Loss Percent

COMMENTS:

Prepared by: W. Hodgdon/RF.
Date: March 2, 1977

STATE OF VERMONT
AGENCY OF TRANSPORTATION
MATERIALS & RESEARCH DIVISION

VERMOMT TEST FOR TIME OF SETTING OF QUICK-SET CEMENTS AND PATCHING COMPOUNDS BY GILLMORE NEEDLES

VT. A.O.T. MRD 5 -77

1. Scope: To determine the time of setting of Quick-Set cements and patching compounds by Gillmore Needles.

2. Apparatus: As described in AASHTO T 154-74 "Time of Setting of Hydraulic Cement by Gillmore Needles".

3. Procedure: Material will be mixed according to manufacturers recommendations. Test procedure will be as described in AASHTO T 154-74.

4. Report: Initial and Final set time and relative comments.

Prepared by: D. Stevens DHB
Date: 4/7/77

STATE OF VERMONT
AGENCY OF TRANSPORTATION
MATERIALS & RESEARCH DIVISION

Vermont Test For
Acid Insoluble Residue
VT AOT MRD 6 -77

1. SCOPE

To determine the resistance of aggregates to weight loss when exposed to a hydrochloric acid solution.

2. APPARATUS

2.1 Set of U.S. Standard 8-inch (20.7 cm) diameter sieves, conforming to the following sizes, 1/2 inch (12.5 mm), 1/8 inch (5.7 mm) and No. 200 (.075 mm).
2.2 Balance, capacity 500 grams sensitive to 0.1 gram.
2.3 Suitable glass containers for performing acid leaching test.
2.4 Oven capable of maintaining 221-230°F (105-110°C).
2.5 Hydrochloric acid solution; 2 Normal (5 parts distilled water and 1 part 12N hydrochloric acid, reagent grade).
2.6 Hydrochloric acid solution; 6 Normal (1 part distilled water and 1 part 12N hydrochloric acid, reagent grade).

3. PROCEDURE

3.1 A representative sample of aggregate shall be screened over the 1/2 inch (12.5 mm) and 1/8 inch (5.7 mm) mesh sieves. The aggregate which is retained on the 1/8 inch (5.7 mm) mesh sieve shall be reduced to a test sample having a minimum size of 100 grams.
3.2 The sample shall be throughly cleaned by washing with potable tap water and dried to a constant weight in an oven at 221-230°F (105-110°C). Then the sample shall be weighed to the nearest 0.1 gram and placed in a glass container.
3.3 The aggregate sample shall be subjected to a hydrochloric acid solution, 2 Normal, until the chemical reaction ceases. Temperature of the aggregate and acid shall be between 70° and 80°F at the beginning of the test. Decant and repeat the addition of fresh 2 Normal acid. Repeat this step of decanting the spent acid and adding fresh acid until there is no further reaction.
3.4 When reaction with the 2 Normal hydrochloric acid stops, repeat the same procedure using 6 Normal hydrochloric acid. When all reaction stops, the acid solubility test is complete.
3.5 Decant the acid solution and rinse the aggregate thoroughly in the glass container with water. The residue in the container should have a Ph as indicated by Ph paper of more than 5.5 after washing.
3.6 Carefully transfer the residue from the container to the No. 200 sieve and wash thoroughly.
3.7 Dry the acid insoluble residue to a constant weight in an oven at 221 to 230°F (105-110°C) to determine the percent insoluble.

4. REPORT

4.1 $\% \text{ Insoluble Residue} = \dfrac{\text{Weight retained on No. 200 sieve (oven dry)}}{\text{Weight of original test sample (oven dry)}}$

PEC

Prepared by:P. Corti
Date:01/10/85

State of Vermont
Agengy of Transportation
Materials and Research Division

Method of Test For Resistance of Concrete and Concrete Treatments To Chloride Ion Penetration

VT. A.O.T. - MRD-7-85

1.Scope:
To determine the chloride ion permeability of treatments designed to protect concrete.

2.Applicable Documents
The State of Vermont determines chloride permeability of concrete by AASHTO test method T-259-80 with certain modifications and Vermont Test Method Vt A.O.T.- MRD -20.

3.Procedure Modifications
Substitute for section 2.3 When the test method is used to evaluate concrete treatments, the slabs shall be fabricated of Class A concrete mixed according to Vermont Transportation Specifications. The concrete treatment shall be applied at 14 days or in accordance with the manufacture's recommendations for field usage.

Substitution for sections 3.4 & 3.5 The slabs shall be subjected to continuous ponding with 3 percent sodium chloride solution to a maximum depth of 0.5 in. After 100 days of exposure the solution shall be removed from the slabs ; allowed to dry and then the surface shall be wire brushed until all salt crystal buildup is removed. Duplicate pulverized samples shall be taken with a rotary hammer at 1/4"to 1" and 1"to 2" depths. The drill holes shall be patched and ponding will continue until 200 days of exposure is obtained at which time chloride samples shall be obtained again as prescribed above.

Substitution for section 3.6 The chloride content of each sample shall be determined in accordance with the instructions in Vt A.O.T.-MRD -20.

Prepared by: J. A. Sumner JAS.
Date: March 29, 1977

STATE OF VERMONT
AGENCY OF TRANSPORTATION
MATERIALS & RESEARCH DIVISION

VERMONT TEST FOR COLD TEMPERATURE FLEXIBILITY OF WATERPROOFING MEMBRANES

VT. A.O.T. MRD 8-77

1. SCOPE

To determine the cold temperature flexibility of waterproofing membranes in the laboratory.

2. APPARATUS

Aluminum flashing .015 inch (.038 cm) thickness cut 2" by 6" (5.08 cm by 15.24 cm).
1 inch (2.54 cm) diameter mandril

3. PROCEDURE

Two methods, depending whether membrane system is liquid or sheet.

3.1 SHEET MEMBRANE

3.1.1 Cut sheet membrane in five 1" by 6" strips.
3.1.2 Place strips in freezer at 0° F to -10° F (-17.8° C to -23.3° C).
3.1.3 Place 1-inch mandril in freezer at same temperature.
3.1.4 After samples are frozen 24 hours, bend individual specimen rapidly over 1-inch mandril inside freezer.
3.1.5 Repeat test on remaining samples every 15 minutes, thus insuring equally cold conditions.
3.1.6 Continue until all samples are bent over mandril.
3.1.7 Record results and comments.

3.2 LIQUID MEMBRANE SYSTEM

3.2.1 Apply liquid membrane at manufacturer's recommended rate on 2" by 6" (5.08 cm by 15.24 cm) pre-cut aluminum flashing. Depending on type of liquid system used, it may prove easier to apply membrane over a large sheet of flashing, after cure cut to desired 2" by 6" size (5.08 cm by 15.24 cm).
3.2.2 Allow five days room cure.
3.2.3 Procedure same as steps 3.1.2 thru 3.1.7

4. REPORT

Include all results as part of prequalification testing of waterproofing membranes.

STATE OF VERMONT
AGENCY OF TRANSPORTATION
MATERIALS & RESEARCH DIVISION

VERMONT PROCEDURE FOR EVALUATING A NEW SOURCE OF STRUCTURAL CONCRETE AGGREGATE

VT-AOT-MRD 9-82

1. SCOPE

A procedure for evaluating new structural concrete aggregate sources by testing proposed new aggregates for compliance with Section 700 requirements and by comparing results of tests performed on concrete using the new aggregate with results obtained from concrete containing a reference aggregate.

2. PROCEDURE

General

The evaluation of a new structural concrete aggregate source (i.e., one on which the Materials and Research Division has no service-in-concrete data) shall be divided into two sections called:

Phase I Section 700 and related tests, and Phase II Performance-in-Concrete tests.

All requests for evaluation of new structural concrete aggregate sources shall be made, in writing, to the Materials and Research Engineer. Requests shall describe the type of material proposed for use as well as the location and quantity of available stockpiles.

Materials and Research Division personnel shall perform all work necessary for both the Phase I and Phase II sections of this evaluation process. The work will be performed in an expeditious manner consistent with availability of manpower. Evaluations may require 60 calendar days or more from the date the aggregate is available for testing (controlled by the availability of personnel to perform testing). Delays beyond the control of the Materials and Research Division shall be documented and notification given of the consequent extension of time required to complete the evaluation.

Test results shall be the basis for determining acceptance, further testing, or rejection of the proposed new material. Failure of the material to comply with all applicable requirements, during any phase of testing, may necessitate rescheduling or termination of the evaluation.

The cost of materials necessary to complete the evaluation will be borne by the requesting party.

A report shall be prepared documenting the Materials and Research Division's involvement in the evaluation. A copy of the report shall be forwarded with a cover letter, informing the requesting party of the acceptability or nonacceptability of the aggregate.

Phase I

1. Following receipt of the written request, the Structural Concrete Engineer will schedule a field petrographic examination of the proposed new aggregate source by the Vermont A.O.T. Chief Geologist.

2. The Structural Concrete Engineer or his representative will visit the site and determine:

   (a) Does a stockpile of at least 50 cubic yards of processed material exist?

   (b) Can samples be obtained in the standard manner from the stockpiles?

3. If 2(a) and 2(b) are yes, the Structural Concrete Engineer shall make necessary arrangements for obtaining samples from the designated stockpile.

4. The material shall be tested at the Central Laboratory using the Structural Concrete Subdivision Annual Aggregate Testing Program procedure.

5. Report the results (as an Evaluation Sample) on the Standard Materials and Research Division forms.

Phase II

1. The performance-in-concrete tests shall be performed on concrete prepared at the Central Laboratory. The proposed new aggregate will be evaluated by comparing results of tests performed on concrete using the new aggregate with results obtained from concrete containing a reference aggregate. Cement, admixtures, and aggregates, other than the proposed new aggregate, will be selected by the Structural Concrete Engineer. Normally, these materials will be the same as the materials currently in use at the Ready-mix plant where the proposed new aggregate will be used.

2. Mix proportions for each class of concrete required shall be designed or approved by the Materials and Research Division and shall conform to Table 501.03A of the Vermont Standard Specifications for Highway and Bridge Construction, current edition.

3. Test cylinders shall be fabricated and cured in accordance with AASHTO T23. They shall be tested for compressive strength at ages 7, 14, and 28 days in accordance with AASHTO T22.

4. Tests of Slump, Air Content, and Unit Weight shall be in accordance with AASHTO T119, AASHTO T152, and AASHTO T121, respectively.

STATE OF VERMONT
AGENCY OF TRANSPORTATION
MATERIALS & RESEARCH DIVISION

VERMONT TEST FOR EFFECTIVENESS OF ANTI-STRIP ADDITIVE IN ASPHALT CEMENT BOILING METHOD

VT-AOT-MRD 10-81

1. SCOPE

A boiling test for checking the effectiveness of anti-strip additives in asphalt cement.

2. APPARATUS

2.1 Sieves - 3/8 inch (9.5mm) and No. 4 (4.75mm) conforming to requirements of AASHTO DESIGNATION: M 92

2.2 Scale or balance conforming to requirements of AASHTO DESIGNATION: M 231 Class E.

2.3 Burner - Open flame, gas operated. (Bunsen burner)

2.4 Metal spatula - six inch.

2.5 Container - metal seamless, 8 oz. capacity.

2.6 Stopwatch - accurate to the nearest second.

2.7 Metal thermometer - range 50°F to 500°F.

3. MATERIALS

3.1 Additive; the anti-strip additive to be tested shall contain no ingredients harmful to the biutminous material and shall not alter appreciably the specified characteristics of the bituminous material. It shall be capable of thorough dispersion in the bituminous material.

3.2 Asphalt Cement; the asphalt cement to be used on a specific project will be used for testing the anti-strip additive selected for the project.

An acceptable AC-10 viscosity graded or 85-100 penetration graded asphalt cement will be used for testing when an anti-strip additive is submitted for a preliminary evaluation.

3.3 Aggregate; the aggregate to be used on a specific project will be used for testing the anti-strip additive selected for the project.

A reference aggregate (Barre Granite) will be used for testing when an anti-strip additive is submitted for a preliminary evaluation.

3.4 Distilled Water.

4. PROCEDURE

4.1 Obtain sample of aggregate from the stockpile using method outlined in the Vermont Materials Sampling Manual.

4.2 Quarter the sample in accordance with AASHTO DESIGNATION: T 428 Method for Reducing Field Sample of Aggregate to Testing Size.

4.3 Sieve aggregate through the 3/8 inch (9.5mm) and number 4 (4.75mm) sieves.

4.4 Weigh out 200 grams of material retained on the number 4 (4.75mm) sieve.

4.5 Place the 200 grams of aggregate in the mixing container and heat to 275°F (135°C).

4.6 Heat asphalt cement to 275°F (135°C).

4.7 To the heated aggregate add 10 grams of preheated asphalt cement containing the correct proportion of anti-strip additive. Mix contents vigouously with a metal spatula until uniformly coated. No bare spots are permissable.

4.8 Let the coated aggregate cool to room temperature.

4.9 Add distilled water to the container, containing the sample, completely

submerging the coated stone.

4.10 Place container over open flame and bring water to a full, rolling boil. Start stopwatch at this point and boil for one minute. After time has elapsed, remove container from the open flame and immediately rinse contents with tap water until cool. Drain off the water and examine.

5. REPORT

5.1 Visual examination: The anti-strip additive will be considered effective when the aggregate remains 95% to 100% coated after the procedure is completed.

Prepared by: J. A. Sumner JAS.
Date: April 14, 1977

STATE OF VERMONT
AGENCY OF TRANSPORTATION
MATERIALS & RESEARCH DIVISION

VERMONT TEST FOR CRACK BRIDGING QUALITIES OF WATERPROOFING MEMBRANES AT COLD TEMPERATURES

VT. A.O.T. MRD 11 -77

1. SCOPE

To determine crack bridging qualities of waterproofing membrane in the laboratory.

2. APPARATUS

3/16" (0.48 CM) diameter anvil
1"x8"x8" (2.54 CM x 20.32 CM x 20.32 CM) concrete mortar blocks (Type I)

3. PROCEDURE

3.1 Using a concrete saw (diamond blade), cut a 1/4" (.63 CM) deep notch through the bottom center of the slab.
3.2 Apply the waterproofing system on upper side of slab, according to manufacturer's recommendation.
3.3 Allow 3 days of cure at normal room temperature.
3.4 After cure, place specimen in freezer @ 0° F to -10° F (-17.8° C to -23.3° C) for 5 days.
3.5 Place 3/16" mandril on the floor in front of the freezer.
3.6 After the proper freeze period, quickly remove specimen and place the notch directly over the length of the mandril.
3.7 Apply even pressure with both feet over specimen until a failure is achieved.
3.8 Observe and note condition of the failure, determine if crack was bridged by membrane.

4. REPORT

Include all results as part of prequalification testing of waterproofing membranes.

STATE OF VERMONT
AGENCY OF TRANSPORTATION
MATERIALS & RESEARCH DIVISION

Method of Test For Moisture Absorption of Concrete Specimens

VT-AOT-MRD-12-84

1. Scope:

   To determine moisture absorption rates of experimental concrete treatments.

2. Procedure:

   All products or treatments for testing shall be used according to manufacturers recommended procedures.

   All treatments shall be applied to 2" inch cube specimens made from a single batch of Class AA concrete mixed according to Vermont Transportation Agency Specifications, cured for seven days in a fog room followed by seven days air drying at room temperature.

   Treatment will be applied to a minimum of three cubes and allowed to air dry for a minimum of 14 days or as recommended by the manufacturer.

   Immediately prior to starting the soaking, the cubes will be weighed to the nearest gram and recorded. All cubes will be totally submerged in water at room temperature.

   Remove cube from the water at 24 hours, 7, 14, 21, 28, 35, 42, 49, 56 and 63 days; towel dry to saturated surface dry condition; weigh to the nearest gram and record.

3. Report:

   Report results as percent weight gain over the original dry weight.

   Note: All testing series shall include an untreated set of three control cubes from the original concrete batch tested and handled in the same manner.

Prepared by: D. P. Stevens DHB
Date: April 15, 1977

STATE OF VERMONT
AGENCY OF TRANSPORTATION
MATERIALS & RESEARCH DIVISION

Vermont Test For Quantitative Extraction of Bitumen from Bituminous Paving Mixtures

AOT MRD 13-77

1. SCOPE

1.1 This method covers procedures for the quantitative determination of bitumen in hot mixed pavement mixtures and pavement samples.

2. APPARATUS

2.1 Extractor apparatus, consisting of a bowl and an apparatus in which the bowl may be revolved at controlled variable speeds. The apparatus shall be provided with a drain for removing the solvent. The apparatus shall be provided with an explosion proof feature and installed under or in a hood to provide ventilation.
2.2 Balance or Scale, capable of weighing a minimum of 4500 grams to an accuracy of one gram.
2.3 Pan, flat, 12"x8"x2" (305x203x51 mm)
2.4 1½ inch soft bristle paint brush.
2.5 Beaker or pitcher capable of holding at least 500 ml of solvent.
2.6 Flexible spatula with six inch long blade.
2.7 Filter Rings. Eaton-Dikeman Grade 627 or equivalent.
2.8 Hot plate, gas or electric with low, medium and high settings or oven capable of maintaining 230° F ±9° (110 ±5° C)
2.9 Solvent - xyol or equivalent

3. PROCEDURE

3.1 Obtain sample of Bituminous Concrete in accordance with method outlined in Vermont Sampling Manual.
3.2 Quarter sample in accordance with AASHTO T-168. If the mixture is not sufficiently soft to separate with a spatula or trowel, place it in a flat pan and warm to 230° F ±9° (110° ±5°C). Prepare size of sample according to following table:

Size of Sample

Nominal Maximum

Nominal Maximum Aggregate Size Standard mm	Alternate	Minimum Mass of Sample kg
4.75	(No. 4)	0.5
9.5	3/8 in.	1
12.5	1/2 in.	1.5
19.0	3/4 in.	2
25.0	1 in.	3
37.5	1-1/2 in.	4

3.3 Weigh sample into bowl.
3.4 Cover sample with solvent and stir.
3.5 Fit two (2) filter rings around edge of bowl.
3.6 Clamp cover on bowl and place in extractor.
3.7 Centrifuge by gradually increasing speed to a maximum of 3600 R.P.M.'s or until solvent ceases to drain. Stop machine and add $\pm$500 ml of solvent. Repeat as necessary, until extract is a light straw color.
3.8 Remove bowl from extraction apparatus. Carefully remove cover and filter rings. Scrape all material adhering to the filter and add to the bowl. Place extracted mineral matter in a flat pan using a spatula and paint brush.
3.9 Dry to a constant weight and weigh.

4. REPORT

Calculate percentage of bitumen as follows:

$$\text{Bitumen, Percent} = \frac{W_1 - W_2}{W_1} \times 100$$

Where: W_1 = Weight of sample before extraction
W_2 = Weight of extracted mineral matter (day)

Prepared by: D. P. Stevens
Date: April 25, 1977

STATE OF VERMONT
AGENCY OF TRANSPORTATION
MATERIALS & RESEARCH DIVISION

VERMONT TEST FOR MECHANICAL ANALYSIS OF EXTRACTED AGGREGATE AOT MRD 14-77

1. SCOPE

1.1 This method of test covers a procedure for the determination of the particle size distribution of fine and coarse aggregates extracted from bituminous mixtures.

2. APPARATUS

2.1 Balance - A balance shall conform to AASHTO M 231, Class E.
2.2 Sieves - Meeting requirements for AASHTO M 92-70.
2.3 Mechanical Shaker - either with a rocking and tapping action or circular and tapping action capable of holding at least six sieves and one pan.

3. PROCEDURE

3.1 This test shall consist of the entire sample of aggregate as determined from VDH MD 13, Test for Quantitative Extraction of Bitumen from Bituminous Paving Mixtures.
3.2 The aggregate shall be sieved as required by the specification for the mixture, until not more than 0.5% of the total sample passes any sieve for one minute of hand shaking.
3.3 The weight passing and retained on each sieve shall be recorded. The summation of these various weights shall be within 0.2% of the total sample.

4. REPORT

4.1 The results of the sieve analysis shall be recorded as percent passing each sieve. Percentages will be recorded to the nearest 0.1%.

Prepared by: D. Stevens
Date: April 26, 1977

STATE OF VERMONT
AGENCY OF TRANSPORTATION
MATERIALS & RESEARCH DIVISION

VERMONT TEST FOR SIEVE ANALYSIS OF COARSE AND FINE AGGREGATES

AOT MRD 15-77

1. SCOPE

1.1 This method of test covers a procedure for the determination of the particle size distribution of fine and coarse aggregates.

2. APPARATUS

2.1 Balance - The balance or scale shall meet the requirements of AASHTO M 231-70 Class E Type 1.

2.2 Sieves - The correct number and sizes of sieves meeting requirements for AASHTO M 92-70.

2.3 Oven or hot plate capable of reaching and maintaining 230° F ±9° F (110° C ±5° C).

2.4 Shaker - Motorized aggregate shaker shall have either rocking and tapping action or circular and tapping action capable of holding at least six sieves and one pan.

3. PROCEDURE

3.1 Samples for sieve analysis shall be obtained in accordance with AASHTO T 248, Method for Reducing Field Samples of Aggregate to Testing size. The sample for test shall be approximately of the weight desired and shall be the end result of the selection method. In no case, however, shall the fraction retained on any sieve at the completion of the sieving operation weigh more than 4 grams per square inch of sieving surface. All samples of fine and coarse aggregate, where the percent of absorbed moisture changes for different particle sizes, shall be dried to a constant weight at a temperature of 230° F ±9° F (110° C ±5° C).

3.2 The sample shall be separated into a series of sizes using such sieves as are necessary to determine compliance with the specifications for the material under test. The sieving operation shall be conducted by a means of a lateral and vertical motion of the sieve, accompanied by jarring action so as to keep the sample moving continuously over the surface of the sieve. The motion of the sieves may be accomplished by mechanical shaker or by hand. In no case shall fragments in the sample be turned or manipulated through the sieve by hand. Sieving shall be continued until not more than 0.5 percent by weight of the total sample passes any sieve during 1 minute of hand sieving. On that portion of the sample retained on the No. 8 (2.36 mm) sieve, the above described procedure for determining thoroughness of sieving shall be carried out with a single layer of material. When mechanical sieving is used, the thoroughness of sieving shall be tested by using the hand method of sieving as described above.

3.3 The mass of each size shall be determined on a scale or balance conforming to the test sample.

4. REPORT

4.1 The results of the sieve analysis shall be recorded as follows: (a) total percentages passing each sieve, or (b) total percentages retained on each sieve, or (c) percentages retained between consecutive sieves, depending upon the form of the specifications for the use of the material under test. Percentages shall be reported to the nearest whole number. Percentages shall be calculated on the basis of the total mass of the sample including any material finer than the 0.075 mm sieve.

Prepared by: J. Bullard
Date: May 3, 1977

STATE OF VERMONT
AGENCY OF TRANSPORTATION
MATERIALS & RESEARCH DIVISION

VERMONT TEST FOR DETERMINATION OF RESISTANCE TO PUNCTURE OF WATERPROOFING MEMBRANES

VT. A.O.T. MRD 16-77

1. SCOPE

To determine the puncture resistance of waterproofing membranes at three specific temperatures in the laboratory.

2. APPARATUS

2.1 Acme Penetrometer
2.2 Steel mold with six drilled 5/8" (1.6 cm) holes.
2.3 2-1/2" (1.3 cm) diameter steel penetration rods with flat and rounded end surfaces.
2.4 Freezer
2.5 Constant temperature oven

3. PROCEDURE

3.1 Membrane specimens are punctured at 0° F, 68° F and 140° F.
3.2 Cut six mold shaped membrane specimens. Measure and record thickness of each sample.
3.3 Place membrane in mold so that top side is up and tighten mold bolts.
3.4 When testing at 0° F, place membrane and mold in the freezer and allow a 24 hour freezing period prior to testing.
3.5 When testing at 140° F place membrane and mold in oven for a 4 hour period prior to testing.
3.6 Using the penetrometer push the flat penetration rod through membrane at all six locations. Record the direct reading in pounds.
3.7 Repeat using the opposite rounded end of the rod.
3.8 Conduct a total of 36 tests with 12 at each temperature range. Six of the 12 using the flat end and six using the rounded end of the rod.

4. REPORT

Include all results as part of prequalification testing of waterproofing membranes.

Prepared by: J. A. Sumner JAS.
Date: May 3, 1977

STATE OF VERMONT
AGENCY OF TRANSPORTATION
MATERIALS & RESEARCH DIVISION

VERMONT TEST FOR DETERMINING RESISTANCE OF WATERPROOFING MEMBRANES TO BUBBLING OR PINHOLING DUE TO VAPOR PRESSURE

VT. A.O.T. MRD 17-77

1. SCOPE

To determine the resistance of waterproofing systems to bubbling or pinholing due to vapor pressures in the laboratory.

2. APPARATUS

2.1 Concrete test slab 18"x18"x2" with 3½" shoulder (46.5 cm x 46.5 cm x 5 cm) (8.7 cm shoulders) containing an expanded metal grid with exposed ground connector lead.

3. PROCEDURE

3.1 Select a day which outside temperatures are rising (sunny day).
3.2 Move test slab outside and check slab level.
3.3 Apply waterproofing membrane system on test slab according to manufacturer's recommendation.
3.4 Observe and monitor any bubbling or pinholing.
3.5 Record observations and accompanying ambient temperatures and time intervals.
3.6 After proper cure time, inspect condition of system and record the number and size of any bubbles or pinholes.

4. REPORT

Include all results as part of prequalification testing of waterproofing membranes.

Prepared by: J. A. Sumner JAS.
Date: April 20, 1977

STATE OF VERMONT
AGENCY OF TRANSPORTATION
MATERIALS & RESEARCH DIVISION

VERMONT TEST FOR DETERMINATION OF PERMEABILITY OF BRIDGE DECK MEMBRANES

VT. A.O.T. MRD 18-77

1. SCOPE

To determine the permeability of bridge deck waterproofing membranes with the use of the electrical resistance test in the laboratory.

2. APPARATUS

2.1 Ohmmeter Simpson Model 372
2.2 Concrete test slab 18"x18"x2" with 3½" shoulders (46.5 cm x 46.5 x 5 cm) (8.7 cm shoulders) containing an expanded metal grid with proper exposed ground.
2.3 Aerosol O.T. wetting agent
2.4 Polyurethane sponge, 9"x7"x 1 3/4" (23 cm x 17.7 cm x 4.2 cm)
2.5 Conductive sensor plate 12"x12"x 1/8" (30 cm x 30 cm x .32 cm)

3. PROCEDURE

3.1 Apply waterproofing membrane system according to manufacturer's recommendation on concrete test slab.
3.2 Allow 5 days minimum cure on membrane system after application.
3.3 Using wetting agent soak sponge, squeeze out excessive moisture and place in center of waterproofed slab.
3.4 Place sensor plate on top of sponge.
3.5 Zero the ohmmeter
3.6 Connect positive lead of ohmmeter to sensor plate and negative lead to metal ground.
3.7 Take resistance readings in ohms until resistance stabilizes.
3.8 Record ohm reading and wetting time period at each interval.

4. REPORT

Include all results as part of prequalification testing of waterproofing membranes.

Prepared by: J. A. Sumner
Date: April 20, 1977

STATE OF VERMONT
AGENCY OF TRANSPORTATION
MATERIALS & RESEARCH DIVISION

VERMONT TEST FOR ADHESION OF BRIDGE DECK WATERPROOFING MEMBRANES

VT. A.O.T. MRD 19-77

1. SCOPE

To determine the adhesion qualities of bridge deck waterproofing membranes to concrete in the laboratory.

2. APPARATUS

1"x2"x3" (2.5 cm x 5 cm x 7.6 cm) concrete mortar block.
Large container of water.

3. PROCEDURE

3.1 Apply waterproofing system according to manufacturer's recommendation to one side of mortar block.*
3.2 Allow 5 days room cure.
3.3 After cure period immerse sample in (H_2O) water.
3.4 Check adhesion at periodic intervals, observe bond between mortar and membrane system.
3.5 Report results and comments.

4. REPORT

Include all results as part of prequalification testing of waterproofing membranes.

*Sheet membrane systems may be difficult to duplicate manufacturer's recommendation in lab. In those instances, procedure above would not apply.

STATE OF VERMONT
AGENCY OF TRANSPORTATION
MATERIALS & RESEARCH DIVISION

VERMONT TEST FOR CHLORIDE CONTENT OF CONCRETE

VT A.O.T. MRD 20-84

1. SCOPE

To determine the chloride content of concrete, quick-set cements and patching compounds.

2. APPLICABLE DOCUMENTS

The State of Vermont determines total chloride ion content by AASHTO method T-260-82, method 1 (Potentiometric Titration) with the following modifications.

3. PROCEDURE MODIFICATIONS

Centrifugation is substituted for filtration as follows:

5.2...Remove acid solution from the hot plate and transfer to centrifuge tube. The beaker containing the residual sample is saved for further extraction with H_2O. The acid solution is centrifuged at 1,800 rpm for 30 minutes and the acid supernatant is then transferred to a 150 ml beaker.

5.3...The steps for extraction are repeated a second time, substituting 50 ml of hot H_2O for the HNO_3. Upon completion of centrifugation, combine the supernatant with the acid supernatant extracted in step 5.2. Proceed to step 5.4.1.

4. REPORT

Chloride content PPM.

STATE OF VERMONT
AGENCY OF TRANSPORTATION
MATERIALS & RESEARCH DIVISION

VERMONT TEST FOR SAMPLING PRELIMINARY MATERIALS TO BE USED IN THE DESIGN OF STABILIZED BASE COURSE OR COLD MIX

Vt AOT MRD 21-79

1. SCOPE

1.1 To describe procedures for obtaining pavement and liquid asphalt samples for the design of stabilized base course.

2. PROCEDURE

2.1 Roadway cores four inches in diameter shall be obtained for each project to determine unit weight. Core frequency should be a minimum of one per lane mile. The minimum depth of each core will be to the desired recycled depth.

2.2 Samples of the pavement to be recycled shall be taken at the same time as the roadway cores and surrounding the core hole covering an area of 4 sq. ft. minimum, and to the depth that the pavement is to be recycled. The samples shall be placed in sealed plastic bags and location identified on sample tags attached to the bags. These samples shall be shipped to the central laboratory for preliminary testing.

2.3 Preliminary asphalt samples shall be obtained from the manufacturer to be tested for conformance to Vermont Specification Section 702. A minimum of two quarts of asphalt will be submitted to the central laboratory.

STATE OF VERMONT
AGENCY OF TRANSPORTATION
MATERIALS & RESEARCH DIVISION

VERMONT TEST FOR DETERMINATION OF THIN AND/OR ELONGATED PARTICLES IN COARSE AGGREGATE VT AOT-MD 22-79

SCOPE

This method of test covers a procedure for determining the percentage, by weight, of thin and/or elongated aggregate particles.

APPARATUS

(1) Balance - A balance of suitable capacity sensitive to 0.1 percent of the test load at any point within the range of use.

(2) Spatula

(3) Measuring Device - Ruler, caliper or other device to measure the aggregate particles.

PROCEDURE

Obtain a representative sample of aggregate and with the use of a sample splitter or by quartering reduce the sample to the approximate quantity needed. Reject all material passing the #4 sieve. Weigh the test sample and place it on a clean, flat surface large enough to permit the material to be spread thinly for inspection. Separate all thin and/or elongated particles.

A particle shall be considered thin when the ratio of the width to thickness of its circumscribing rectangular prism is greater than 5. See Fig. 1.

A particle shall be considered elongated when the ratio of the length to width of its circumscribing rectangular prism is greater than 5. See Fig. 1.

JUN 1979

Calculate the percentage of thin and/or elongated particles as follows:

$$T = \frac{W1}{W} \times 100$$

T = Percentage of thin and/or elongated particles

W1 = Weight of thin and/or elongated particles

W = Weight of original sample

Report

The weight of thin and/or elongated particles shall be expressed as a percentage of the total mass of the test sample. Results shall be reported to the nearest whole number.

FIGURE 1

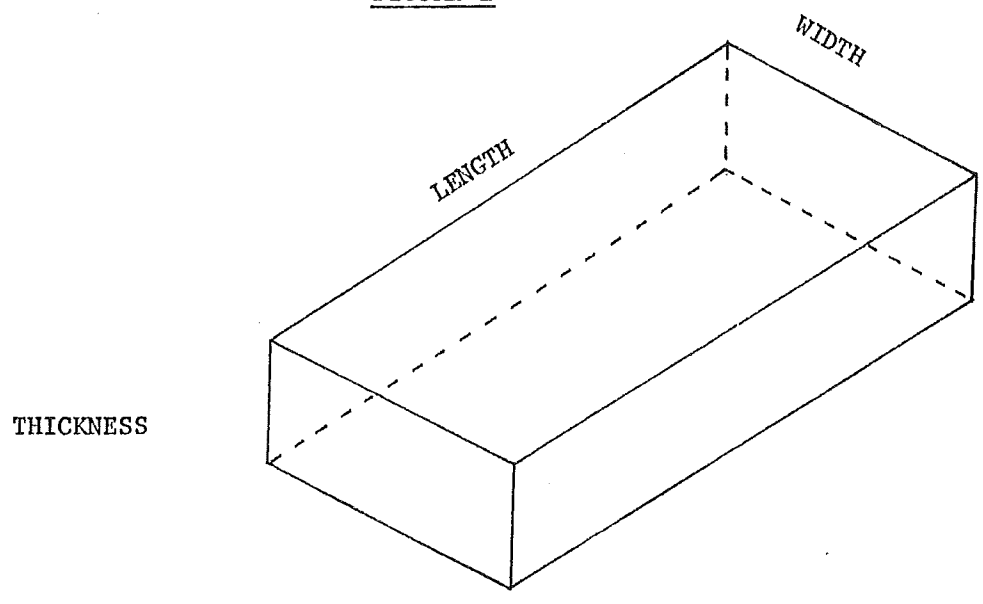

$$\text{Thin} = \frac{\text{Width}}{\text{Thickness}} \qquad \text{Elongated} = \frac{\text{Length}}{\text{Width}}$$

STATE OF VERMONT
AGENCY OF TRANSPORTATION
MATERIALS & RESEARCH DIVISION

VERMONT TEST FOR DETERMINATION OF COARSE AGGREGATE PARTICLES WITH FRACTURED FACES
VT AOT-MD 23-79

SCOPE

This method of test covers a procedure for determining the percentage, by weight, of coarse aggregate particles with fractured faces.

APPARATUS

(1) Balance - A balance of suitable capacity sensitive to 0.1 percent of the test load at any point within the range of use.

(2) Spatula

PROCEDURE

Obtain a representative sample and with the use of a sample splitter or by quartering, reduce the sample to the approximate quantity needed. Reject all material passing a #4 sieve. Weigh the test sample and place it on a clean, flat surface large enough to permit the material to be spread thinly for inspection. Use the knife edge of a spatula to separate the particles with at least one freshly fractured face. Fresh fractures, whether occuring naturally or by mechanical methods shall have sharp, well defined edges.

Calculate the percentage of particles with fractured faces as follows:

$$F = \frac{W_1}{W} \times 100$$

F = Percentage of fractured face material

W_1 = Weight of fractured face material

W = Weight of original sample

REPORT

The weight of particles with fractured faces shall be expressed as a percentage of the total mass of the test sample. Results shall be reported to the nearest whole number.

JUN 1979

Prepared by: E. Chaffee
Date: June 5, 1979

STATE OF VERMONT
AGENCY OF TRANSPORTATION
MATERIALS & RESEARCH DIVISION

Vermont Test For Preparing Preliminary Samples to be Used In The Design of Stabilized Base Course or Cold Mix

Vt AOT MRD 24-79

1. SCOPE

1.1 To describe procedures for: crushing pavement samples, determining the gradation of the crushed material, testing the asphalt, and determining compatibility of aggregate and asphalt.

2. PROCEDURE

2.1 The pavement sample taken from the roadway must be prepared for testing by crushing the material in the laboratory jaw crusher. The crusher shall be adjusted to give a gradation meeting a maximum size of two inches as stated in Vermont Specification Section 310.

2.2 A sieve analysis shall be run in accordance with AASHTO T-27.

2.3 The asphalt shall be tested for conformance to Vermont Specification Section 702.

2.4 After the aggregate and asphalt have been tested and are in conformance with specifications a compatibility test shall be run on the two acceptable materials in accordance with AASHTO T-59 Coating Ability and Water Resistance.

3. REPORT

3.1 Report the test results obtained and comment as materials are accepted or rejected.

Prepared By: J. Sumner

STATE OF VERMONT
AGENCY OF TRANSPORTATION
MATERIALS & RESEARCH DIVISION

VERMONT TEST FOR FREEZE-THAW DURABILITY OF STRUCTURAL CONCRETE MIXES

VT AOT MRD 25-78

1. SCOPE:

To determine freeze-thaw durability of structural concrete mixes in a 3% NACL solution under laboratory conditions.

2. APPARATUS:

2.1 As described in AASHTO T106-72 referring to 2" molds only minus weights, sieves, mixers, flow table and mold.

3. PROCEDURE:

Place plastic concrete into molds and store as described in AASHTO T106-72. At the end of 24 hours all molds will be removed and specimens placed in fog room for a period of 28 days. At the end of 28 days all specimens will be removed from the fog room and stored in the laboratory at a constant 50% humidity.

Immediately prior to starting the freeze-thaw cycling, the selected cubes will be soaked in water a minimum of 2 hours and then weighed in a saturated surface dry condition to determine initial weights. Three cubes at cured ages of 28, 60, and 90 days will be immersed 1" in a 3% NACL solution and freeze-thaw cycles begun. A record of freeze-thaw cycles will be kept and specimens soaked and weighed surface dry at 25 cycle intervals. The percent of weight loss will be computed from the original weight of specimens and records kept. Freeze-thaw cycling should be stopped at any time if severe deterioration is noted.

4. REPORT:

Report will consist of percent weight loss at various freeze-thaw cycle intervals as well as comments on visual observations.

VT-AOT MRD 26-78

IS REPLACED BY

VT-AOT MRD 3-86

STATE OF VERMONT
AGENCY OF TRANSPORTATION
MATERIALS & RESEARCH DIVISION

Vermont Test For Determining the Correct Asphalt and Moisture Contents to be Used in a Stabilized Base Course or Cold Mix

Vt AOT MRD 27-79

1. SCOPE

1.1 To determine the correct asphalt and moisture content for a stabilized base course. A composite evaluation of coating ability, stability, flow and density will be made on each of nine asphalt and moisture combinations as follows:

% Asphalt By Weight of Dry Aggregate		
2	3	4
2	2	2
3	3	3
4	4	4

2. APPARATUS

2.1 Mixing Apparatus: Mechanical mixing is recommended with a metal pan or bowl of sufficient capacity, or hand mixing may be used.

2.2 Spatula: A steel spatula 8 inches in length.

2.3 Absorbent paper (extraction filter paper is sufficient)

2.4 Marshall Stability apparatus AASHTO T-245

3. MATERIALS

3.1 Aggregate: 9 1500g samples of air-dried crushed pavement 2 inches maximum size.

3.2 Asphalt: 2 quarts of the grade of asphalt to used on the project. The asphalt shall conform to Section 702-Bituminous Materials.

3.3 Water: Tap water

4. PROCEDURE

4.1 Weigh 30g (2%) tap water into one of the 9 - 1500g samples and mix for 3 minutes. At the end of the mixing period weight 30g

(2%) asphalt into the mixture in the pan and mix for an additional 3 minutes.

4.2 Remove approximately 300g of the mixture from the pan and place it on absorbent paper and evaluate the coating.

4.3 With the remaining 1200g, make a Marshall specimen as described in AASHTO T-245. Modification as follows: Specimen shall be made and tested at room temperature. After curing in air for 24 hours, measure thickness, weigh in air and water for density; and test the specimens for stability and flow as described in AASHTO-245. Modification as follows: All curing will be done at 77°F in an air bath, not water.

4.4 Repeat this procedure with the remaining 8 mixture combinations as illustrated in Section 1.1.

5. INTERPRETATION OF RESULTS

5.1 At the end of the mixing period, record the coating of the total aggregate surface area by the asphalt as good, fair, or poor where a rating of "good" means fully coated by the asphalt exclusive of pinholes and sharp edges of the aggregate, a rating of "fair" applies to the condition of an excess of coated area over uncoated area, and a rating of "poor" applies to the condition to an excess of uncoated area over coated area.

5.2 After air-drying in the laboratory, record the coating of the total aggregate surface area by the asphalt as good, fair, or poor.

5.3 Evaluation of stability, flow, and dry density shall be done by the use of graphs to determine the percentages of asphalt and moisture that gives favorable stability and flow values and yet has sufficient density to allow the desired compaction. See page 4.

6. EVALUATION

6.1 A composite evaluation of coating ability, stability, flow, and density must be made on each of the nine combinations and the combination that has the best overall qualities will be chosen for the design.

7. CALCULATION AND REPORT

7.1 Calculate and report percentage of residual bitumen by weight of mixture.

$$\text{Residual Bitumen, percent} = \frac{A \times B}{C}$$

Where:

A = Grams of liquid asphalt added to mixture
B = Percent of residual asphalt in liquid asphalt
C = Total weight of mixture

7.2 Calculate and report percent moisture as percent by weight of dry aggregate.

EVALUATION WORKSHEET
FOR STABILIZED BASE COURSE OR COLD MIX

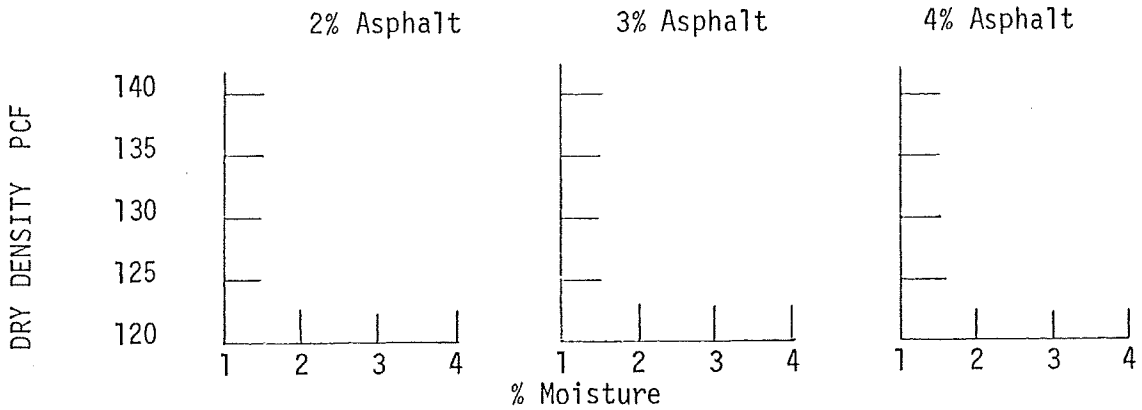

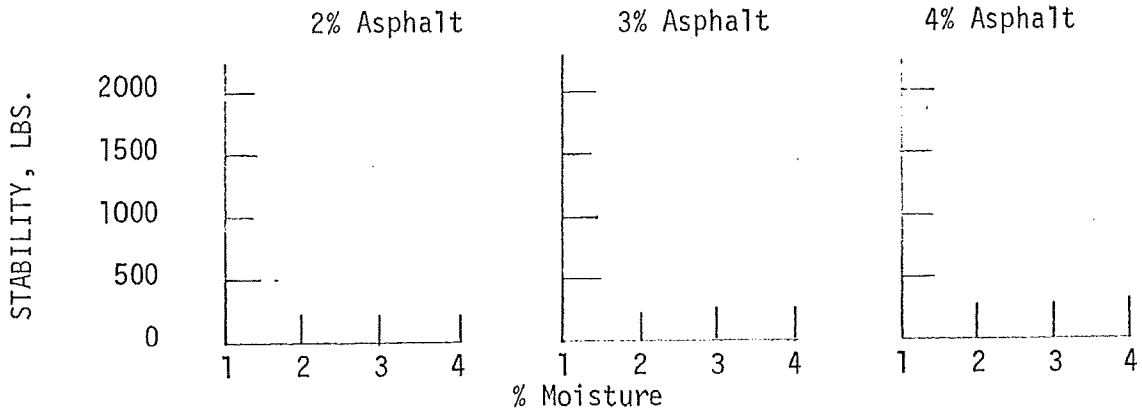

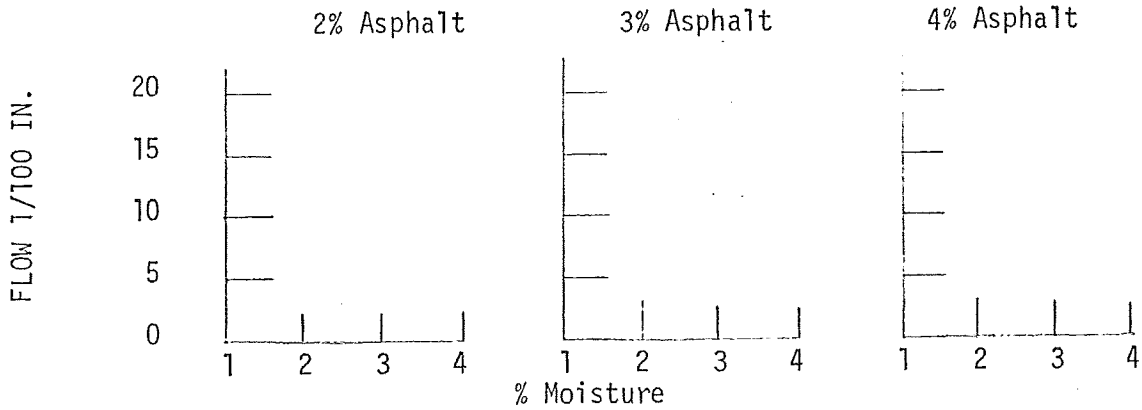

STATE OF VERMONT
AGENCY OF TRANSPORTATION
MATERIALS & RESEARCH DIVISION

VERMONT TEST FOR AIR CONTENT OF FRESHLY MIXED CONCRETE BY THE CHACE AIR INDICATOR

VT AOT MRD28-79

SCOPE

This procedure provides a quick and ready means of ascertaining the approximate air content of freshly mixed concrete in the field.

APPARATUS

(1) Pail - Approximately 10 quart capacity

(2) Sieve - 5 inch diameter No. 10 mesh (2.00 mm square openings).

(3) Spatula - 3 inch

(4) Indicator with Rubber Stopper, Cup Attached (Chace)

(5) Denatured Alcohol

(6) Impervious Mixing Board

(7) Spoon or Scoop

PROCEDURE

(1) Obtain a sample of fresh concrete as designated in AASHTO T-141 Sampling Fresh Concrete.

(2) Remix the sample in pail.

(3) Remove a small portion of the sample from the pail and place it in the 5 inch sieve. Manipulate with the spatula so as to force the particles of mortar smaller than No. 10 sieve through it. Continue to manipulate the sample until approximately one cubic inch of the mortar has been forced through the sieve. Fold the resulting mortar together several times. Pick up a small amount of mortar and place it in the cup of the indicator. Spade the mortar with the spatula and tap the outside of the cup to fill

JUN 1979

in the voids left by spading. Strike off the excess mortar and clean the outside of cup.

(4) Place your thumb over the stem of the indicator and fill to within 1/2 inch of the top with alcohol. Insert the mortar filled cup and stopper into the indicator.

(5) Invert the indicator, stem up, and adjust the liquid level even with the top line on the stem. Make sure all air bubbles are removed and the stopper is firmly inserted.

(6) Place your thumb over the stem opening and gently shake the indicator with a rolling wrist action to remove all mortar from the cup. Terminate shaking with the stem in a vertical position to remove all mortar particles from the stem.

(7) Being careful not to lose any liquid, carefully remove your thumb from the stem opening. Count the marks from the top to new liquid level. The number of marks indicates the percent of air in the mix. Record results.

(8) Care should be exercised in removing stopper from the indicator so that sand particles will not jam between the stopper and the glass.

(9) Wash and clean the equipment with clean water.

REPORT

The results determined by the Chace Air Indicator shall be recorded to the nearest 0.25 percent.

STATE OF VERMONT
AGENCY OF TRANSPORTATION
MATERIALS & RESEARCH DIVISION
COMPLIANCE TESTING SUBDIVISION

VT. A.O.T.-MRD 29-84

Method of Test for Compressive Strength of Cylindrical Concrete Specimens Using Neoprene Caps

1. Scope

1.1 This method covers the procedure for compressive strength tests on 6 inch diameter by 12 inch high concrete cylinders using neoprene caps with steel extrusion controllers.

The method is used when strength tests results are for monitoring the quality of the concrete and to verify other control procedures.

Note: When the compressive strength test results are used for determining actual payment of a concrete item or product, or for comparison with other institutions, or reference samples, use test method AASHTO T 231, Capping Cylindrical Concrete Specimens.

2. Apparatus

2.1 Two steel extrusion controllers conforming to the dimensions shown on Figure 1. All bearing surfaces of the controller, both inside and outside, shall be machined plane to within 0.002 in. (0.05mm). The exterior face of each extrusion controller have a Rockwell hardness of between HRC 45 and HRC 50. During use, the outside bearing surface shall be maintained free of gouges, dents, or protrusions larger than 0.03125 in. (0.79mm) in depth or 0.0625 in.^{2} (40.3mm^2) in surface area. The inside bearing surface shall be maintained to within 0.002 in (0.05mm) of plane.

2.2 Caps made from neoprene meeting the requirements of ASTM D2000, line call-out M2BC520A14B14. The dimensions of the caps shall be 6 1/8 in. (155.6mm) in diameter and 1/2 in. (12.7mm) thick.

2.3 A compression testing machine meeting the requirements specified in AASHTO T 22-82, Compressive Strength of Cylindrical Concrete Specimens, Subsection 3 & 4.

2.4 Concrete cylinders tested with neoprene caps rupture more intensely than comparable cylinders tested with sulfur-mortar caps. As a safety precaution, a protective cage should be used around the cylinders when testing with neoprene caps.

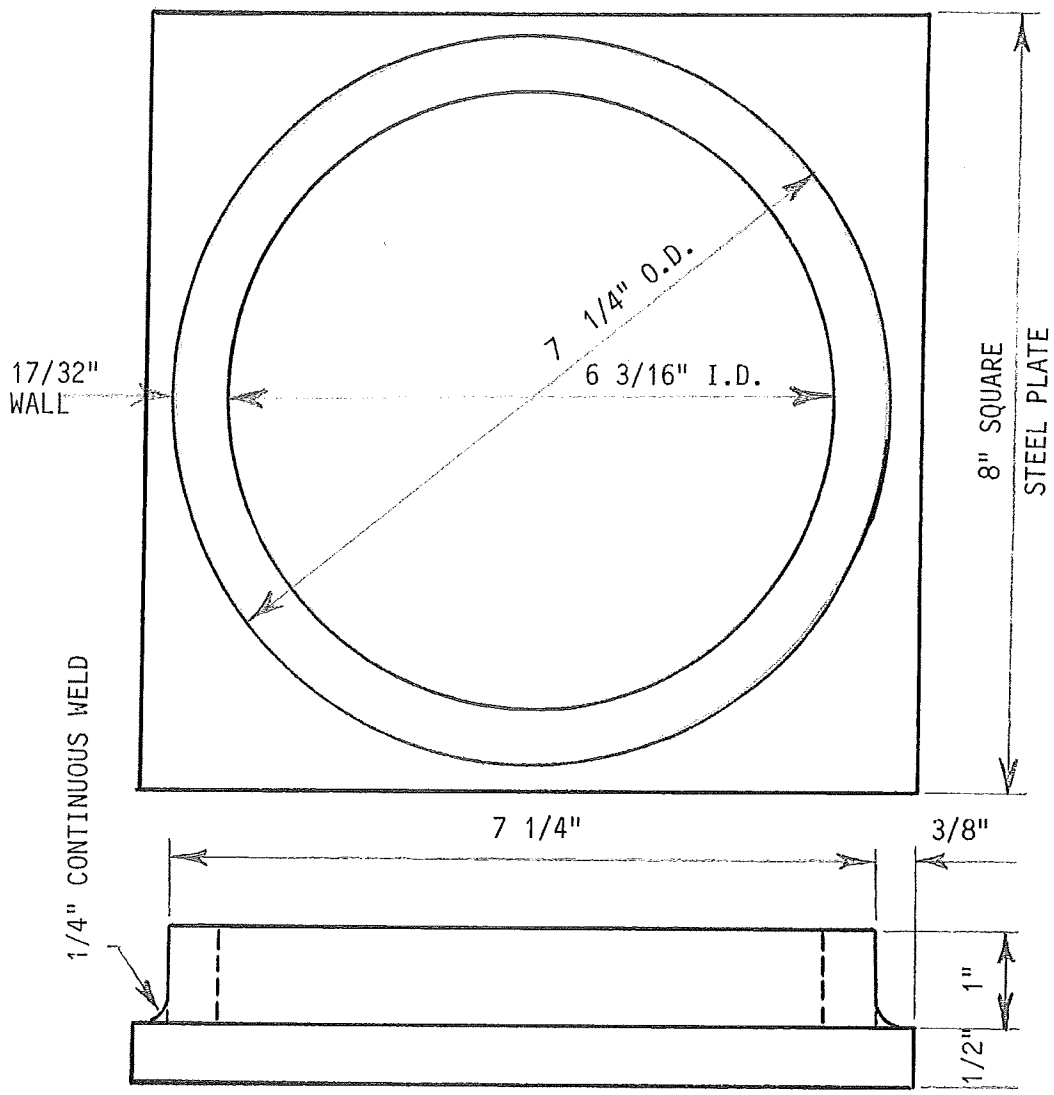

Figure #1 Steel Extrusion Controllers

3. Test Specimens

3.1 Each end of the concrete cylinder shall be plane within 0.25 in. (6.35mm) across any diameter; i.e., there shall be no depressions in the concrete surfaces which are deeper than 0.25 in. (6.35mm).

Cylinders which do not meet this tolerance shall not be tested unless the surface irregularity is first corrected.

3.2 Neither end of the concrete cylinder shall depart from perpendicularity to the axis of more than 2 degrees, 20 minutes (approximately equivalent to 0.5 inch in 12 inches (41.7mm)). Cylinders not meeting this tolerance shall not be tested unless this irregularity is first corrected.

3.3 Compression tests of moist-cured specimens shall be made as soon as practicable after removal from the curing room. Test specimens shall be kept moist by convenient method during the period between removal from moist storage and testing. They shall be tested in a moist condition.

3.4 The diameter of the test specimen shall be determined to the nearest 0.01 in. (0.25mm) by averaging two diameters measured at right angles to each other at about midheight of the specimen. This average diameter shall be used for calculating the cross-sectional area. When the length of the specimen is less than 1.8D or more than 2.2D, the length shall be measured to the nearest 0.05D.

4. Procedure

4.1 Place an extrusion controller, containing a neoprene cap, on the top and bottom surface of the concrete cylinder. With the neoprene caps in contact with the concrete cylinder, carefully align the axis of the specimen with the center of thrust of the spherically seated block. Bring the bearing blocks of the machine in contact with both of the extrusion controllers.

4.2 No loose particles shall be trapped between the concrete cylinder and the neoprene caps, or between the bearing surfaces of the extrusion controllers and the bearing blocks of the test machine.

4.3 The same surface of the neoprene cap shall bear on the concrete cylinder for all tests performed with that cap. Each neoprene cap shall be used until it exhibits noticeable wear. Such wear would not be normally expected until after 100 uses.

4.4 Rate of Loading - Apply the load continuously and without shock. In testing machines of the screw type, the moving head shall travel at a rate of approximately 0.05 in (1.3mm)/min. when the machine is running idle. In hydraulically operated machines, apply the load at a constant rate within the range 20 to 50 psi/s (0.14 to 0.34 MPa/s). During the application of the first half of the anticipated load, a higher rate of loading shall be permitted. Make no adjustment in the controls of the testing machine while a specimen is yielding rapidly immediately before failure.

4.5 Apply the load until the specimen fails, and record the maximum load carried by the specimen during the test. Note the type of failure and the appearance of the concrete.

5 & 6 Calculation & Report

Shall be performed as specified in AASHTO T 22-82, Compressive Strength of Cylindrical Concrete Specimens, Subsection 7 & 8.

Reviewed By:

R. F. Nicholson 03-20-84

R. F. Nicholson, P.E.
Materials & Research Engineer

March 20, 1984

STATE OF VERMONT
AGENCY OF TRANSPORTATION
MATERIALS & RESEARCH DIVISION

Vermont Test For Thermal Compatibility Between Concrete and Epoxy Resins

VT. A.O.T. MRD 30-78

1. SCOPE

To determine which epoxy resin formulations are subject to debonding when used in conjunction with concrete when the combination of the two is subjected to temperature changes that may be met in the field.

2. SUMMARY

A layer of epoxy-sand mortar is applied to a slab of cured and dried concrete. After the epoxy has cured, the sample is subjected to five cycles of temperature change between 77° F and -6° F. Cracks near the bond line between the concrete and the epoxy mortar constitute failure of the test.

3. APPARATUS

3.1 Molds, metal or wood sufficient to form a concrete block 6x3 3/4x2 in.
3.2 Freezer, sufficient to obtain -6°± 3° F.
3.3 Retaining strips, to retain the epoxy mortar overlay. Pieces of wood or steel that can be attached to the 6x3 3/4x2 in. concrete block so as completely to enclose the top surface of the block and rise above it a uniform distance of 0.5 in. Inside dimensions shall be 2 3/4x4 3/4 in.

4. MATERIALS

4.1 Portland cement. Type I or Type II meeting requirements for Portland Cement.
4.2 Standard sand, Ottawa Silica Sand 20-30.
4.3 Acceptable fine aggregate for concrete.

5. PREPARATION OF CONCRETE BLOCKS

5.1 Proportions. A Type I mortar consisting of 50 percent Portland Cement and 50 percent fine aggregate shall be used to make the blocks. The amount of water to be added shall be 18.3% of the combined weight of the cement and aggregate.
5.2 Fabrication. Oil the form prior to fabrication. Fill the mold in one layer. Rod one time for each 2 in.^{2} of surface, leaving a slight excess of material after the rodding. Tap the mold to close any voids and level the surface with several passes of a wood strike-off board.
5.3 Curing. Cover the specimens with a polyethylene sheet immediately after finishing. Remove the specimens from the molds at an age of 24 hours. Specimens shall then be placed in a moisture cabinet for 13 days. Remove the specimens from moist storage at the age of 14 days and store in air for a minimum of 14 days prior to use.

5.4 Surface preparation. Prior to the application of the epoxy mortar, wire brush the top surface of the concrete block, and remove any loose material with a bristle brush.

6. FABRICATION OF TEST SPECIMEN

6.1 Assemble the retaining strips to the concrete blocks. Coat their inner surfaces with a suitable bond breaker.

6.2 Preparation of epoxy mortar. Prepare enough epoxy mortar to cover two concrete blocks. Mix the epoxy resin under test according to the instructions of the manufacturer. Add 20-30 Ottawa Sand to the mixed resin at the rate of 3 parts sand to 1 part resin or at the rate recommended by the manufacturer and mix thoroughly.

6.3 Application of epoxy mortar. Prime the surface of the concrete blocks with the recommended primer if required by the manufacturer. Apply the epoxy mortar in a layer flush with the top of the retaining strips. Remove the retaining strips after 24 hours and allow the epoxy mortar to cure an additional 6 days at 77° F.

7. PROCEDURE

7.1 After the aging period, subject the specimens to five cycles of temperature change betweem 77° F and -6° F. Place the specimens in a freezer maintained at -6° F for a minimum of 8 hrs. At the end of freezing time remove the specimens from the freezer and subject them to a temperature maintained at 77° F for a minimum of 8 hrs.

7.2 At the end of each cycle check for bond failure between the epoxy mortar and the concrete block. If no failure in bond is observed that material shall be considered to have passed the test.

8. REPORT

If either of the duplicate samples fails to pass the test, report that the epoxy resin under test fails to meet requirements.

STATE OF VERMONT
AGENCY OF TRANSPORTATION
MATERIALS & RESEARCH DIVISION

Vermont Test For Effective Shrinkage of Epoxy Resin Systems Used With Concrete

VT. A.O.T. MRD 31-78

1. SCOPE

To determine the effective shrinkage occurring during the curing of epoxy resin systems.

2. SUMMARY OF METHOD

A laminate is constructed of the epoxy resin applied to a glass plate. As the epoxy cures any shrinkage will cause a bowing of the glass plate. Failure in the test consists of shrinkage sufficient to fracture the glass.

3. APPARATUS

3.1 Glass Panels. Two 4 inch by 10 inch panels of single strength window glass.

3.2 Forms. Suitable forms shall be made on a sheet of polyethylene of minimum thickness of 1/8 inch and conforming to the requirements of ASTM Specification D2103. Use polyethylene strips 1/8 inch thick to provide a space having inner dimensions of 3-1/2 x 9-1/2 x 1/8 inch deep.

3.3 Oven. The oven for the temperature cycling of the cured laminates shall be Gravity-connection and Forced-ventilation ovens maintained at 51.6±26 (124.9±3.6 F).

4. SPECIMEN PREPARATION

4.1 Assemble duplicate forms, as described in 3.2. Immediately before forming the laminates, wash the glass panels with detergent and water, rinse them with distilled water, and wipe them two times with a cloth moistened with acetone.

4.2 Mix a 350-g batch of the epoxy resin system for five minutes. Pour the mixture slowly into the forms, adding a slight excess. Immediately lower the glass panels into place onto the layer of epoxy, taking care to avoid air bubbles.

4.3 Place a total weight of 1/2 lb. distributed uniformly on each of the glass panels, and allow the lamininated specimens to cure in laboratory air for 24 hours.

4.4 Twenty-four hours after mixing, remove the epoxy-glass laminate from the forms and allow it to age, glass side down, for 6 days at 77° F.

5. PROCEDURE

5.1 After the aging period, subject the laminates to eight uninterrupted cycles of temperature conditioning. Each cycle shall consist of 30 minutes in the oven at 125° F. followed by 30 minutes at 75° F in the laboratory.

5.2 After the completion of the temperature cycles, allow the laminates to remain in the laboratory air for an additional 2 hours.

5.3 If the procedures in 5.1 and 5.2 are completed without fracturing of the glass panel, that material shall be considered to have passed the test.

6. REPORT

If either of the duplicate samples fail to pass the test, report that the epoxy resin under test fails to meet requirements.

STATE OF VERMONT
AGENCY OF TRANSPORTATION
MATERIALS & RESEARCH DIVISION

Vermont Test For Maintenance of Adhesion and Elongation During Freeze-Thaw Cycling of Polyurethane Joint Sealers

VT. A.O.T. MRD 32-78

1. SCOPE

To determine bond and cohesion qualities of polyurethane joint sealers.

2. APPARATUS

Six mortar blocks 1 by 2 by 3 in. Type I mortar. Freezer capable of maintaining 10° F.

3. PROCEDURE

3.1 After conditioning the unopened sample for at least 24 hours at room temperature apply a bead of sealant 1/2 by 1/2 by 2 inches between parallel 2 by 3 inch faces of 2 concrete mortar blocks. Wood or metal spacers are used to form the proper size of bead. Use any suitable release agent to prevent adhesion to the spacers. Prepare 2 specimens as described.

3.2 After curing for 7 days, the samples shall be extended to 25 percent elongation 0.625 in., and held in the extended position. The samples shall then be alternately frozen at 10° F and thawed in water for 50 cycles or until a failure in bond or cohesion is noted.

4. REPORT

Any failure in bond or cohesion which occurs during the cycling constitutes a failure and the product tested shall be reported as fails to meet requirements.

Prepared By: E. Chaffee E. L. C.
Date: 2/23/78

STATE OF VERMONT
AGENCY OF TRANSPORTATION
MATERIALS & RESEARCH DIVISION

Vermont Test For Tack Free Time of Polyurethane Joint Sealer

VT. A.O.T. MRD 33-78

1. SCOPE

To determine tack free time of polyurethane joint sealers. Maximum allowable time shall be 72 hours.

2. APPARATUS

2.1 Polyethylene form with inside dimensions 5"x1 1/2"x1/4" thick.
2.2 2 aluminum plates 3 by 6 in. (16 to 24 gage)
2.3 2 polyethylene strips 4 by 1 1/2 by 0.004 in.
2.4 Balance sensitive to 0.01g
2.5 Metal straight edge
2.6 Brass weight, 30 grams, 1 5/8 by 1 by 5/8 in.

3. PROCEDURE

3.1 After weighing the aluminum plates to the nearest 0.01g., prepare 2 specimens as described.
3.2 Fill the form, after centering it on the aluminum plate, with a portion of the sample and strike off flat with a metal straight edge. Lift the frame from the sealant after running a thin blade along the inside of the frame.
3.3 After exposing the specimen for 72 hours, press the polyethylene film on the top surface with the brass weight (30g.) for 30 seconds. Remove the weight and withdraw the film progressively at right angles to the compound.

4. REPORT

The sample meets the requirements if the film pulls off from each of the two specimens without any sealant adhering to it.

Prepared By: E. Chaffee E.L.C.
Date: 2/23/78

STATE OF VERMONT
AGENCY OF TRANSPORTATION
MATERIALS & RESEARCH DIVISION
RESEARCH & DEVELOPMENT SUBDIVISION

Vermont Test For Weight Loss After Heat-Aging of Polyurethane Joint Sealers

VT. A.O.T. MRD 34-78

1. SCOPE

To determine weight loss after heat-aging. Maximum allowable weight loss shall be 10 percent.

2. APPARATUS

2.1 Polyethylene form with inside dimensions 5"x1 1/2"x1/4" thick.
2.2 2 aluminum plates 3"x6" (16 to 24 gage).
2.3 Forced draft oven controlled at 158±2° F.
2.4 Balance sensitive to 0.01g.
2.5 Metal straightedge

3. PROCEDURE

3.1 After weighing the aluminum plates to the nearest 0.01g., prepare 2 specimens as described.
3.2 Fill the form, after centering it on the aluminum plate, with a portion of the sample and strike off flat with a metal straightedge. Lift the frame from the sealant after running a thin blade along the inside of the frame.
3.3 After exposing the samples for 7 days at room temperature weigh the specimens to the nearest 0.01g. and place them in an oven controlled at 158±2° F for 21 days.
3.4 At the end of the heat treatment remove the specimens from the oven and allow them to cool for 1 hour and weigh to the nearest 0.01g. Calculate the percentage weight loss of the compound based on the original net weight.

4. REPORT

Report the percent weight loss, any loss over 10 percent constitutes a failure, and the product tested shall be reported as fails to meet requirements.

Prepared By: J. Sumner
Date: Oct. 4, 1978

STATE OF VERMONT
AGENCY OF TRANSPORTATION
MATERIALS & RESEARCH DIVISION

VERMONT TEST FOR OBTAINING SAMPLES OF PULVERIZED CONCRETE FOR CHLORIDE ANALYSES

VT - A.O.T. MRD 35-78

1. SCOPE

1.1 This method describes the procedure for obtaining samples of pulverized portland cement concrete for chloride analysis.

2. APPARATUS

2.1 A rotary impact drill with a depth indicator and 3/4" drill bits.
2.2 Spoons capable of obtaining samples from drilled holes.
2.3 Clean paint brush 1" wide.
2.4 Sample container capable of maintaining the sample in an uncontaminated state.
2.5 A "blow out" bulb for the purpose of removing excess sample before re-drilling operations.

3. PROCEDURE

3.1 Select location for coring.
3.2 Set the rotary hammer depth indicator to the desired depth.
3.3 Cleanly drill until desired depth is obtained.
3.4 Obtain sample of pulverized concrete, thoroughly clean the hole utilizing the "blow out" bulb.
3.5 Reset depth indicator and repeat operation until desired depth is obtained.
3.6 Patch hole after cleaning with quick-set patching compound.

Reserve For

MRD 36

No Record at This Time

Prepared By: R. I. Frascoia
Date: Aug. 30, 1985

STATE OF VERMONT
AGENCY OF TRANSPORTATION
MATERIALS & RESEARCH DIVISION
VT. A.O.T. - MRD 37-85

Method of Test for Locating and Measuring Delaminations in Concrete Bridge Decks

1. Scope

1.1 This method covers the procedure for surveying bridge decks by sounding with a chain drag to determine the location and amount of delamination in the concrete.

2. Significance & Use

2.1 This practice may be used in conjunction with other test methods in determining the general condition of concrete bridge decks or for determining specific areas of delamination requiring repair.

3. Apparatus

3.1 Chain Drag. Acceptable chains are those which produce a clear ringing sound when dragged over non-delaminated concrete and a dull or hollow sound when dragged over delaminated concrete. A common size and configuration consists of four 18 inch segments of 1 inch link chain of 1/4 inch diameter steel equally spaced along a 15 inch piece of 3/8 inch diameter rod. A 22 inch rod is attached to the midpoint, forming a "T" with an additional short handle at the top.

3.2 Measuring Tape, Markers, Stringline. A measuring tape, markers, and stringline shall be provided for establishing a grid system on the bridge deck. Markers such as spray paint or lumber crayon shall be used to outline delaminated areas on the deck surface.

4. Bridge Deck Layout

4.1 Construct a grid system on the deck surface with a lumber crayon such that delaminated areas marked on the deck can be easily plotted on a map by referencing the areas to the grid.

5. Test Procedure

5.1 Survey the entire bridge deck by dragging the chains along the surface. On nondelaminated concrete, a clear ringing sound is noted. A dull or hollow sound is emitted when delaminated concrete is encountered.

5.2 Mark the areas of delmaination on the deck surface with the spray paint or lumber crayon.

6. Plotting

6.1 Construct a scaled map of the deck surface.

6.2 By referencing to the established grid system on the deck, plot the areas of delamination on the map.

6.3 Determine the total area contained in the individual delaminated areas.

6.4 Divide the total delaminated area by the total bridge deck area and multiply by 100 to yield the percent of deck area delaminated.

7. Report

7.1 The report shall include the following:

7.1.1 Bridge location and description.

7.1.2 Date of test

7.1.3 Percent of deck area delaminated

7.1.4 Remarks

Reviewed By:

R. F. Nicholson 09-05-85
R. F. Nicholson, P.E.
Materials & Research Engineer

Sept., 1985

STATE OF VERMONT
AGENCY OF TRANSPORTATION
MATERIALS & RESEARCH DIVISION

VT-AOT-MRD 38-86

VERMONT PROCEDURE FOR CONDUCTING AN ANNUAL TESTING PROGRAM OF STRUCTURAL CONCRETE AGGREGATES

Samples of aggregates for concrete are obtained annually from all available sources. Tests are performed to determine specification compliance and to provide information for designing concrete mixtures. Sampling and testing is shared by the Structural Concrete Subdivision and Compliance Testing Subdivision.

A. Sampling

Samples are usually obtained during the Fall months (October-December) to permit testing as part of the winter program. Following specified sampling procedures, three bags of 3/4 inch coarse aggregate and two bags each of 3/8 inch coarse aggregate and fine aggregate are obtained. The sampling containers shall be clean, closely woven cloth bags provided by the Central Laboratory. Samples are identified for size and source and transported to the Central Laboratory.

A "Laboratory Number" is assigned to each sample by the Structural Concrete Subdivision. This number is used to identify the sample in all stages of testing and reporting.

B. Storage of Samples

Prior to testing, the samples are stored in an assigned area of the open stalls, northwest of the State Garage. Samples are stored on wooden pallets to permit air-drying of the aggregates and prevent rotting of the cloth bags. Samples are laid flat, one source (seven bags) per pallet.

C. Tests Performed by Structural Concrete Subdivision

The Structural Concrete Subdivision is responsible for performing the following tests:

1) Unit weight of Aggregate AASHTO T19 (Dry Rodded)
2) Specific Gravity and Absorption of Fine Aggregate AASHTO T84
3) Specific Gravity and Absorption of Coarse Aggregate AASHTO T85

D. Tests Performed by Compliance Testing Subdivision

The Compliance Testing Subdivision is responsible for performing the following tests:

1) Soundness of Aggregate by use of Sodium Sulfate or Magnesium Sulfate AASHTO T104 (Sodium Sulfate).

2) Resistance to abrasion of small size Coarse Aggregate by use of the Los Angeles Machine AASHTO T96.

3) Determination of Thin and/or Elongated particles in Coarse Aggregate Vt. AOT MD22.

4) Determination of Coarse Aggregate Particles with Fractured Faces VT AOT MD23.

5) Compressive Strength of Mortar - in accordance with Section 704.01(c) Vermont Agency of Transportation Standard Specifications for Highway and Bridge Construction.

E. Preparation of Report

The Structural Concrete Subdivision shall prepare, for each sample, an "Annual Aggregate Testing Program Summary" Form Number TA 570G. Data is further processed by preparing an "Annual Aggregate Testing Program - (Year) Composite Summary" Form Number TA 570G1 showing all testing program results for the designated year.

R.J.N.
01-29-86